All Pages Of This Edition Approved			
Signature:		Date:	

由 Autodesk 教育版产品制作

REV.	DESCRIPTION	REVISER	DATE
A0	First issue	luojinwei	2014.06.27
A1	改显示模式	luojinwei	2015.05.16

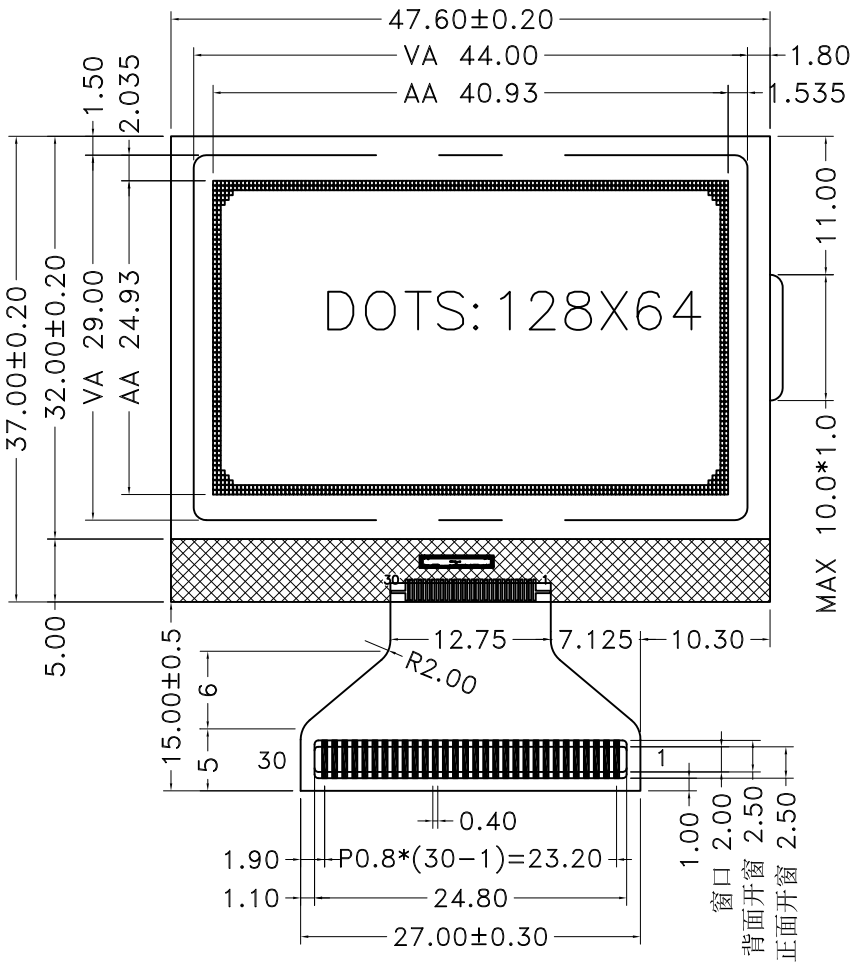

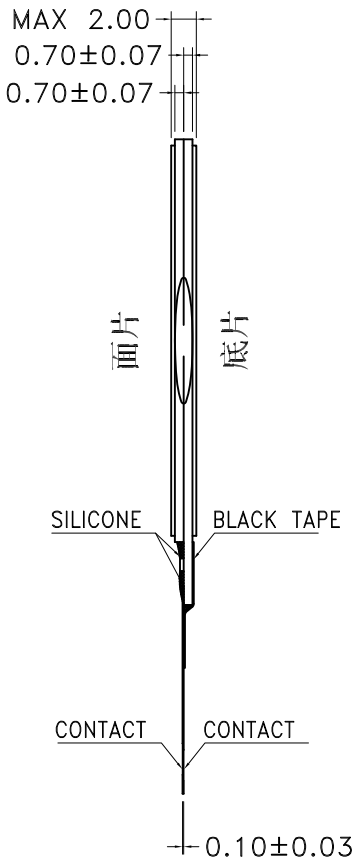

1	ESD	16	VSS
2	CS1B	17	VOUT
3	RST	18	CAP3+
4	AO	19	CAP1−
5	/WR(R/W)	20	CAP1+
6	/RD(E)	21	CAP2+
7	D0	22	CAP2−
8	D1	23	V4
9	D2	24	V3
10	D3	25	V2
11	D4	26	V1
12	D5	27	V0
13	D6	28	C86
14	D7	29	PSB
15	VDD	30	ESD

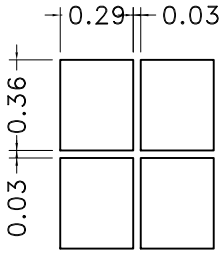

DOTS SIDE
SCALE 20:1

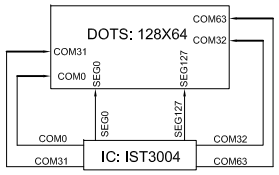

LCD LAYOUT

Specifications:
1. Display Mode: FSTN/TransMissive/Positive. (A1)
2. Viewing Angle: 6 O'clock.
3. Drive Method: 1/64 Duty 1/9 Bias, Vop=9.0V, Vdd=3.0V.
4. Top: −10°C~+60°C, Tst: −20°C~+70°C.
5. Connector: COG+FPC.
7. Drive IC: IST3004
8. With" * " Mark Dimensions Are Important Dimensions.

LUMMAX ELECTRONICS CO.,LTD

Unspecified Tolerance:	±0.20	UNITS: mm	DATE:	MODEL NUMBER :		SHEET:	1 OF 1
DESIGN BY:		luojinwei	2015.05.16	HFG12864-134-PFDN-R-A1			
CHECKED BY:						DATE:	2015.05.16
APPROVED BY:				DO NOT SCALE THIS DRAWING.	PROJECTION		

由 Autodesk 教育版产品制作
由 Autodesk 教育版产品制作
由 Autodesk 教育版产品制作